Cool Line®
Intravascular Heat Exchange Catheter Kit
Instructions for Use

CL-2295A/8700-0781-01

106928-001 Rev 6

Cool Line® Intravascular Heat Exchange Catheter Instructions for Use

Model CL-2295A/8700-0781-01

Caution. Federal law restricts this device to sale by or on the order of a physician.

Cool Line® Intravascular Heat Exchange Catheter Kit includes:

Quantity	Description
1	Cool Line intravascular heat exchange catheter 9.3 French x 22 cm Triple infusion Luer Extension line clamps Radiopaque shaft Applause heparin coated
1	Guidewires 0.032" (0.81 mm) x 65 cm
1	Vessel dilator 10 F x 0.038" (3.4 mm x 1.0 mm)
1	Detachable suture tab & clip
1	18 ga x 2½" (1.3 mm x 63 mm) Radiopaque PTFE OTN catheter
1	000 Silk suture
6	4" x 4" (10 cm x 10 cm) Gauze sponges
1	No. 11 Surgical blade with long handle
1	3 cc Syringe & 25 ga x 1½" (0.5 mm x 25 mm) Needle
1	Fenestrated drape
1	18 ga x 2¾" (1.3 mm x 70 mm) Needle
1	Needle disposal cup
1	SureSite transparent film dressing

Device description

The Cool Line intravascular heat exchange catheter ("Cool Line catheter" or "catheter") is a sterile, single use flexible 9.3 F catheter designed for placement in the central venous circulation from an insertion site in the jugular, subclavian, or femoral veins. The catheter is to be connected to a ZOLL® single use disposable Start-Up Kit and the Coolgard®/Thermogard® family of consoles ("console") (all supplied separately). A dilator and guidewire are required for the percutaneous insertion of the catheter. Three Luers are available for infusion, measuring central venous pressure or sampling.

Infusion port	Flow rate	Priming volume
Proximal (blue)	1400 ml/hr	0.3 cc
Medial (white)	1200 ml/hr	0.3 cc
Distal (brown)	2100 ml/hr	0.4 cc

The catheter blood contact surfaces (tip, balloon, and shaft) are treated with an anti-thrombotic Applause heparin coating.

Sterility

Ethylene oxide sterilized. The catheter is supplied sterile for single use only and should not be resterilized. The package should be inspected prior to use to ensure that the sterility barrier has not been compromised.

Storage

Store in a cool, dry place. Avoid freezing and excessive heat

Indications for use

The Cool Line Catheter Model CL-2295A, when used with the ZOLL Thermal Regulation System, is indicated for use in fever reduction, as an adjunct to antipyretic therapy, in adult patients with cerebral infarction and intracerebral hemorrhage who require access to the central venous circulation and who are intubated and sedated.

WARNING – Fever Reduction

The safety of this device has not been demonstrated for fever reduction in patients presenting with subarachnoid hemorrhage or primary traumatic brain injury. The safety and effectiveness of this device was examined in a randomized controlled trial of 296 patients. The mortality results reported in this trial, for the four patient cohorts enrolled, are presented in the table below (CI – cerebral infarction, ICH – intracerebral hemorrhage, PTBI – primary traumatic brain injury, SAH – subarachnoid hemorrhage).

	Cool Line			Control			
	n	N	%	n	N	%	p*
CI	3	16	18.8	3	14	21.4	0.74
ICH	8	33	24.2	7	27	25.9	1.00
PTBI	10	44	22.7	4	38	10.5	0.24
SAH	13	61	21.3	7	63	11.1	0.15

* Fischer's exact test

For more details on the clinical trial results, refer to the Physician's Manual – "Normothermia for the Neuro-critically Ill stroke patient".

Contraindications

1. The risks of the catheter are essentially those of a central line. The catheter should not be used in patients for whom central line placement is not indicated.
2. Bleeding diathesis.
3. Active sepsis.

ZOLL Circulation, Inc.
2000 Ringwood Avenue
San Jose CA 95131 USA
+1.408.541.2140 (main)
+1.408.541.1030 (fax)
Reorder USA only: +1.978.421.9655
Patent: www.zoll.com/patents

106928-001 Rev 6

4. Infection or active bleeding at the site of catheter insertion.
5. Patients with no vascular access, or a vascular system that will not accommodate a catheter.
6. Patients for whom the required temperature monitoring cannot be established.
7. Hypothermia is contraindicated in patients who have hematological diseases that will be made worse with hypothermia (e.g., any disease that produces cryoglobulinemia, any hemoglobinopathy in which hemolytic anemia can be precipitated by cold including Sickle Cell Disease or Thalassemia).
8. Not intended for pediatric or neonatal use.

Warnings, precautions, adverse reactions

Central venous catheterization should only be performed by well-trained personnel well-versed in anatomical landmarks and safe technique. Personnel should also have knowledge of potential complications.

WARNING

The catheter should be placed via a jugular, subclavian, or femoral vein approach only. Do not allow the catheter to be placed into the right atrium or right ventricle. Placement in the right atrium or right ventricle can result in severe patient injury or death.

Single use only. The product is designed for single use only. Do not resterilize or reuse. Do not reinsert, once removed from the patient. Do not alter the catheter in any way. Maximum use period: 7 days.

Potential risks with reuse of a single use device include but are not limited to

- Potentially life threatening infection
- Toxic shock due to degradation of materials
- Increased risk of thrombosis
- Reduced heat exchange power
- Device failures

WARNING. The catheter and Start-Up Kit could potentially misconnect with other devices with small bore connectors. Such misconnection errors could result in patient injury or death.

Caution. The custom Luers on the catheter and Start-Up Kit may reduce the risk of misconnections but still have the potential for misconnections with these specific medical device applications: Breathing Systems & Driving Gases applications, Enteral & Gastric applications, Urethral & Urinary applications, Limb Cuff Inflation applications, Neuraxial applications, and Intravascular or Hypodermic applications. Always use caution when connecting ZOLL catheters and Start-Up Kits to these and other medical device applications.

Caution. Ensure that the catheter and/or Start-Up Kit are not connected to another medical device.

1. The use of intravascular cooling devices controls fever, including fever due to sepsis. Care must be taken to assess patients for sepsis.
2. **Caution.** If blood is observed within the sterile saline circuit, stop the procedure and perform the check for a catheter leak.
3. Do not allow the catheter to be placed into the right atrium or right ventricle. If placed via the jugular or subclavian veins, the catheter should be positioned so that the distal tip of the catheter is in the superior vena cava above its junction with the right atrium and parallel to the vessel wall. X-ray examination should be used to ensure that the catheter is not in the right atrium or ventricle. The distal tip of the catheter should be positioned at a level above either the azygos vein or the carina of the trachea, whichever is better visualized. If placed via the femoral vein, the catheter should be positioned so that its distal tip is in the inferior vena cava, below its junction with the right atrium and parallel to the vessel wall.
4. Possible complications with central venous catheters include: atrial or ventricular perforation, cardiac tamponade, air embolism, catheter embolism, thoracic duct laceration, bacteremia, septicemia, thrombosis, inadvertent arterial puncture, hematoma formation, hemorrhage, nerve damage and dysrhythmias.
5. All Luer-Lock connections and covers must be securely tightened to prevent air embolism or fluid or blood loss.
6. Never use excessive force in moving the catheter or guidewire. If resistance is encountered, an x-ray should be performed to identify the reason for the resistance.
7. Passage of the guidewire into the right heart can cause dysrhythmias, right bundle branch block, vessel wall, atrial or ventricular perforation.
8. Use only sterile normal saline for catheter priming. It is the circulating fluid in the catheter.
9. The catheter should be routinely inspected for flow rate, security of dressing, correct catheter position, and for secure Luer-Lock connections. Use the centimeter markings to identify if the catheter position has changed. A potential risk associated with multi-lumen balloon catheters is a lack of therapy, including failure to infuse drug therapy through the infusion lumens.
10. Only x-ray examination can ensure that the catheter tip has not entered the heart or no longer lies parallel to the vessel wall. If the catheter position has changed, perform an x-ray examination to confirm the catheter tip position.
11. For blood sampling, temporarily shut off the remaining infusion ports through which solutions are being infused.
12. Use only a 30 cc or smaller syringe for blood sampling.
13. Alcohol and acetone can weaken the structure of the shaft material. Care should therefore be taken when infusing drugs containing alcohol or when using alcohol or acetone when performing routine catheter care and maintenance. Alcohol should not be used to declot the catheter.
14. Use only the ZOLL suture tab and clip provided in the kit to prevent catheter damage.
15. Use of a syringe smaller than 10 ml to irrigate or declot an occluded catheter may cause intraluminal leakage or catheter rupture.
16. Do not infuse into the orange IN and OUT Luer-Lock connections, as this will result in lack of therapy.
17. Fever may have infectious and/or non-infectious causes in patients. Mitigation of fever as a sign of possible infection necessitates daily, meticulous assessment for other signs of infection.
18. Use care when infusing drugs that may be affected by cool temperatures (as low as 4ºC). Solutions containing mannitol are temperature-sensitive and must not be delivered through the catheter except for a rapid push of a solution of up to 20% mannitol, followed by a saline flush. Higher than a 20% concentration of mannitol drip or infusion pump delivery of mannitol must be done via a separate line.
19. Cardiac Tamponade: Placement of indwelling catheters in the right atrium is a practice that may lead to cardiac perforation and tamponade. Practitioners placing central venous catheters must be aware of this potentially fatal complication before advancing the catheter too far relative to patient size. The actual position of the tip of the indwelling catheter should be confirmed by x-ray after insertion. Central venous catheters should not be placed in the right atrium unless specifically required for special relatively short term procedures, such as aspiration of air emboli during neurosurgery. Such procedures are nevertheless risk-prone and should be closely monitored and controlled.
20. The catheter is coated with heparin. This may induce or aggravate pre-existing heparin induced thrombocytopenia (HIT).

21. **WARNING.** When connecting infusion sets/injection systems to ZOLL catheters, do not exceed 100 psi/689 kPa.
22. For patients being made hypothermic, the hypothermia itself may exacerbate some disease states. Care should be taken to properly monitor patient homeostasis during hypothermia.
    - Cardiac rhythm disturbances–both bradycardia and ventricular tachyarrhythmia.
    - Clotting and coagulations function. Patients at risk for disturbances of their clotting or coagulation function should be closely monitored during hypothermia.
    - Blood gas and pH analysis. Hypothermia modifies resting pH and $PaCO_2$. Physicians should be aware of the effect of temperature upon the result.
    - Prolonged hypothermia depresses the immune response and lung function.

WARNING. Intraluminal or balloon leakage. Intraluminal leakage (between the saline lumen and infusion lumens) or balloon leakage is a potential catheter failure mode. In the event of such a failure, sterile saline from the cooling circuit is introduced into the patient. Intraluminal leakage or balloon leakage is typically associated with a fluid loss alarm once the saline bag has been depleted and stops the system. **Always investigate fluid level alarms.** The cooling circuit is a closed loop system – usually fluid loss alarms indicate a breach somewhere in this closed loop. With any fluid loss alarm, check both the integrity of the catheter and the Start-Up Kit (see below).

WARNING. If you notice a depleted saline bag or an air trap alarm, do not replace the saline bag prior to identifying the location of the leak and taking the appropriate mitigation. Check for system leaks according to the instructions in the Check for a Start-Up Kit leak and Check for a catheter leak sections below. (Note that a leak could be external or internal.)

Replacing the saline bag repeatedly without investigating the leak or loss of saline may result in unintended infusion of saline into the patient. Saline infusion may lead to the following adverse effects: local swelling that can cause subsequent local tissue damage; systemic fluid overload that can lead to dependent edema and subsequent skin breakdown; internal organ fluid overload, with subsequent overloading of the brain, lungs or heart. In some cases, this fluid overload may lead to life threatening events.

Caution. The console emits an alarm when the saline bag is empty. The bag must be completely empty and additional saline must have drained between the saline spike and the air trap for the saline level in the air trap to drop sufficiently to trigger the alarm.

Check for a Start-Up Kit leak

1. Check the air trap for condensation. If the air trap shows signs of condensation, wipe the air trap and reinstall it in the console. In the case of an air trap alarm, verify that the air trap alarm is cleared after this step.
2. Carefully check the saline path from the saline bag to the console for any leaks. Check if there is saline on the floor, console, or the patient's bed.
3. If there is any saline on the floor, console, or the patient's bed, check that the Luers on the catheter and Start-Up Kit are not cracked or damaged and that the connections are tight enough to prevent leaks.
4. If you find a leak in the Start-Up Kit, replace the Start-Up Kit and see if there is also a leak in the catheter.
5. If you do not find a leak in the Start-Up Kit, there is likely a leak in the catheter. Investigate further.

Check for a catheter leak

1. Disconnect the Start-Up Kit from the catheter. Properly cap both the catheter and Start-Up Kit using an aseptic technique.
2. Fill a sterile 10 mL slip tip syringe with sterile saline.
3. Connect the syringe to the IN Luer of the catheter and disconnect the OUT cap. Infuse 10 mL of saline – the saline should flow out the OUT Luer. If the saline does not flow out of the OUT Luer, a catheter leak is indicated.
4. Cap the OUT Luer and pull 5 cc of vacuum. Sustain for at least 10 seconds. Up to 4 mL of saline (not blood) should enter the syringe and you should be able to maintain the vacuum. If traces of blood are seen in the syringe or vacuum cannot be maintained, it indicates a catheter leak.
5. If you find a leak in the catheter, replace the catheter.
6. Replace the saline bag and re-prime the Start-Up Kit.
7. Ensure leak-tight Luer connections to the Start-Up Kit and continue the therapy.

Materials required

Quantity	Description
1	Cool Line Catheter Kit for percutaneous introduction
1	500 cc bag of sterile normal saline (not provided)
1	Start-Up Kit (provided separately) • 6 ft (183 cm) standard tubing or • 9 ft (274 cm) extended tubing
1	Coolgard or Thermogard console (provided separately)

Catheter preparation and insertion

Note. The catheter has a radiopaque marker band to assist in identification of the catheter during and after insertion when viewed using x-ray equipment. The proximal end of the proximal balloon has one marker band. The tip of the catheter contains barium sulfate to make it radiopaque.

Use sterile technique.

Caution. The IN and OUT Luer-Locks on the catheter are custom-manufactured and are intended to connect only with the ZOLL Start Up Kit listed in Materials required.

Preparing the catheter

1. Place the patient in a slight Trendelenburg position as tolerated to reduce the risk of air embolism. If the femoral approach is used, place the patient in a supine position.
2. Prep and drape the puncture site as required.
3. Carefully remove the catheter from the package, leaving on the catheter membrane cover.
4. Remove the caps from the IN and OUT Luers. With the catheter cover in place, fill a syringe (5 cc or larger) with sterile saline and attach the syringe to the female IN Luer.

   WARNING. Never inject positive pressure into the IN Luer with the OUT Luer cap in place.
5. Gently inject saline through the catheter until it begins to exit from the OUT Luer.
6. Using a 5 cc or larger syringe, flush the distal, proximal, and medial infusion Luers with sterile saline. Clamp or attach the injection caps to the proximal and medial infusion Luers. Leave the distal Luer uncapped for guidewire passage.

   Caution. Always prime the catheter infusion Luers before inserting the catheter into the patient.

7. Remove the catheter membrane cover. If there is resistance in removing the membrane cover from the catheter, flush the membrane cover with sterile saline. Inspect the catheter to ensure that air has been purged from the heat exchange membrane. Inspect the catheter for leaks.

   Caution. Avoid excessive wiping of the coated catheter. Avoid wiping the catheter with dry gauze, as this may damage the catheter coating. Avoid using alcohol, antiseptic solutions, or other solvents to pre-treat the catheter, because this may cause unpredictable changes in the coating, which could affect the device safety and performance.

   WARNING. Do not cut the catheter to alter length.

Inserting the catheter

Caution. Use jugular, subclavian, or femoral vein approach only.

1. Obtain jugular, subclavian, or femoral venous access using standard percutaneous techniques. Access should be maintained with a 0.032" (0.81 mm) guidewire. See Guidewire Instructions for Use.

   WARNING. Do not attempt to reinsert a partially or completely withdrawn OTN (over the needle) introducer needle from its catheter.

   Caution. Do not use a guidewire larger than 0.032" (0.81 mm) with the catheter.

2. Holding the guidewire in place, remove the introducer catheter.

   Caution. Maintain a firm grip on the guidewire at all times.

3. Enlarge the cutaneous puncture site with the cutting edge of the scalpel positioned away from the guidewire.

   WARNING. Do not cut the guidewire. Use a vessel dilator to enlarge the site as required. Do not leave the vessel dilator in place as an indwelling catheter, to minimize the risk of a possible vessel wall perforation.

4. Thread the tip of the catheter over the guidewire. Maintain a sufficiently firm grip on the guidewire during catheter insertion. Grasping the catheter tip near the skin, advance the catheter into the vein. Continue to advance the catheter over the guidewire, placing your fingers just proximal to the balloon.
5. Using centimeter marks on the catheter as positioning reference points, advance the catheter to at least the minimum marker number to ensure the proximal infusion port is in the vessel.
6. Hold the catheter at the desired depth and remove the guidewire. If resistance is encountered when attempting to remove the guidewire after catheter placement, the guidewire may be kinked at the tip of the catheter. If resistance is encountered, withdraw the catheter relative to the guidewire about 2–3 cm and attempt to remove the guidewire. If resistance is encountered again, remove the guidewire and catheter simultaneously.

   Caution. Do not apply undue force to the guidewire.

7. Verify that the guidewire is intact upon removal.
8. Check catheter placement by attaching a syringe to the distal infusion Luer and aspirate until a free flow of venous blood is observed. Connect the infusion Luers to the appropriate Luer-Lock line(s) as required. Unused infusion port(s) may be "locked" through the injection cap(s) using standard hospital protocol. Slide clamps are provided on the tubing to occlude flow through the infusion Luers during line and injection cap changes.

   Caution. To minimize risk of damage to the tubing from excessive pressure, the clamp must be opened prior to infusing through the Luer.

   Caution. Do not clamp or occlude the IN or OUT lines. This can cause line blockage and possible failure.

9. Secure and dress the insertion site and catheter temporarily.
10. If subclavian or jugular access is used, verify the catheter tip position by chest x-ray immediately after placement. The x-ray examination must show the catheter located in the right side of the mediastinum in the SVC with the distal end of the catheter parallel to the vena cava wall. The catheter distal tip must be positioned at a level above either the azygos vein or the carina of the trachea, whichever is better visualized. If the catheter tip is malpositioned, reposition and reverify. If femoral access is used, x-ray examination must show the catheter located in the IVC with the distal end of the catheter parallel to the vena cava wall. If the catheter tip is malpositioned, reposition and reverify.
11. The proximal radiopaque marker indicates the proximal end of the balloon. Ensure that the balloon and proximal port reside completely in the vessel. If the catheter is malpositioned, reposition and reverify.
12. Secure the catheter to the patient. Use the suture tab side wings as the primary suture site to minimize the risk of catheter migration.
13. The ZOLL suture tab and clip can also be used as an additional attachment point. Ensure that the catheter body is secure and does not slide.

    Caution. Use only the ZOLL suture tab and clip provided in the kit. Catheter damage may result if other tabs or clips are used.

    Caution. Do not suture directly to the outside diameter of the catheter, to minimize the risk of cutting or damaging the catheter or impeding catheter flow.

14. Dress the puncture site per hospital protocol. Maintain the insertion site with regular meticulous redressing using aseptic technique.
15. Record on the patient's chart the indwelling catheter length using the centimeter marks on the catheter shaft as reference. Frequent visual reassessment should be made to ensure that the catheter has not moved.
16. Attach a primed Start-Up Kit to the catheter: Connect the male Luer of the Start-Up Kit to the female IN Luer of the catheter (labeled "IN"). Connect the female Luer of the Start-Up Kit to the male OUT Luer of the catheter (labeled "OUT"). White "ZOLL" tags are fitted loosely to the IN and OUT extension tubes to help identify them.

    Note. The Start-Up Kit IN and OUT Luers are only intended to connect to the catheter IN and OUT Luers and are not intended to connect to standard Luer Lock syringes. They have ZOLL custom fittings and are orange in color for easy identification.

17. Ensure that a sufficient amount of sterile saline is present at the ends of the Luers to make an air-free connection. Refer to the operation manual.

    WARNING. Failure to connect the Start-Up Kit correctly to the catheter could result in catheter failure. Do not attach the Start-Up Kit (orange) Luers to the blue, white, or brown infusion Luers.

    Caution. Do not attach the Start-Up Kit to the distal port.

    Caution. Do not place any stopcocks in line that may be inadvertently shut off. This can cause line blockage and possible failure.

18. Pump saline through the Start-Up Kit and catheter to ensure that all connections are secure and that there is no leaking. Allow any remaining air in the system to be purged out as described in the operation manual.

Disconnecting the catheter from the console

1. Stop circulation of saline through the catheter.
2. Disconnect the Start-Up Kit from the catheter.
3. To maintain sterile connections, immediately cap off the Luer connectors of both the catheter and Start-Up Kit using sterile Luer caps, or connect the IN and OUT Luers together.

Reconnecting the catheter to the console

1. Remove the Luer caps from the Luer connectors of the catheter and Start-Up Kit. Discard the Luer caps or disconnect the IN and OUT Luers from each other.
2. Attach the Start-Up Kit to the catheter: Connect the male Luer of the Start-Up Kit to the female IN Luer of the catheter. Connect the female Luer of the Start-Up Kit to the male OUT Luer of the catheter. The Start-Up Kit and catheter IN and OUT Luers are orange in color. Ensure that a sufficient amount of sterile saline is present at the ends of the Luers to make an air-free connection.

   WARNING. Failure to connect the Start-Up Kit correctly to the catheter could result in catheter failure.

   WARNING. Do not use the IN and OUT Luer fittings for standard central line infusion ports. They are for connection to the Coolgard or Thermogard console only.
3. The Start-Up Kit IN and OUT Luers are only intended to connect to the catheter IN and OUT Luers. They have ZOLL custom fittings and are orange in color for easy identification.

   Caution. Do not place any extra stopcocks in line that may be inadvertently shut off. This can cause line blockage and possible failure.

Removing the catheter

1. Stop pumping saline through the catheter.
2. Disconnect the Start-Up Kit from the catheter. Uncap or leave uncapped the IN and OUT Luers of the catheter. This allows residual saline within the circuit to be expressed. As the catheter is withdrawn, the balloons are compressed. Saline within the balloons must be free to pass out of the balloon or the balloon will not deflate, making the catheter difficult to remove.
3. Optionally, attach a 20 or 25 cc slip fit syringe to the catheter IN Luer. Pull and hold a vacuum for 15 seconds to allow residual saline to be removed from the catheter balloon section prior to removing the catheter.
4. Place the patient in a supine position. Remove the dressing. Remove the sutures from the suture site.

   WARNING. Do not place a Luer cap on the OUT Luer.
5. Slowly remove the catheter from the patient. As the catheter exits the site, apply pressure with a dressing impermeable to air (e.g. Vaseline gauze).

   WARNING. Do not move the catheter if resistance is felt. Check to ensure that the IN and OUT Luers of the cooling circuit are NOT capped. If they are capped, uncap them, deflate the balloon, and try removing the catheter again. If resistance is still encountered, an x-ray should be performed to identify the reason for the resistance.

MRI safety information

MR Conditional

The Cool Line Intravascular Heat Exchange Catheter is MR Conditional. A patient with this catheter may be safely scanned under the following conditions. Failure to follow these conditions may result in injury to the patient.

Parameter	Condition
Nominal Values of Static Magnetic Field (T)	1.5 T and 3.0 T
Maximum Spatial Field Gradient (T/m and gauss/cm)	40 T/m (4,000 gauss/cm)
Type of RF Excitation	Circularly Polarized (CP) (i.e., quadrature-driven)
Transmit RF Coil Information	There are no transmit RF coil restrictions. Accordingly, the following may be used: body transmit RF coil and all other RF coil combinations (i.e., body RF coil combined with any receive-only RF coil, transmit/receive head RF coil, transmit/receive knee RF coil, etc.)
Operating Mode of MR System	Normal Operating Mode
Maximum Whole Body Averaged SAR	2-W/kg (Normal Operating Mode)
Limits on Scan Duration	Whole body averaged SAR of 2-W/kg for 60 minutes of continuous RF exposure (i.e., per pulse sequence or back to back sequences/series without breaks)
MR Image Artifact	The presence of this implant produces an imaging artifact. Therefore, carefully select pulse sequence parameters if the implant is located in the area of interest.
WARNING	The ZOLL Coolgard and Thermogard consoles are MR Unsafe and, thus, these consoles are not allowed in the MR system room. Therefore, the catheter must be disconnected from the console prior to moving the patient into the MR system room.

Guidewire Instructions for Use

Caution. Federal law (USA) restricts this device to sale and use by or on the order of a physician.

Note. This information applies only to the use of guidewires in the Seldinger technique of catheter placement in the vasculature.

Warnings

The supplied guidewire is designed for single use only. Do not resterilize or reuse. Do not reinsert, once removed from the patient.

Should resistance occur during insertion or withdrawal, do not continue to move the guidewire. Determine the cause under fluoroscopy and take action as needed.

Use extreme caution when moving a guidewire through a stent. Use of a guidewire in stented vessels creates additional patient risk.

Cautions

Avoid withdrawing the guidewire through metal needles; the guidewire may shear.

Because of the delicate and fragile nature of guidewires, extra care in handling must be taken. Avoid bending or kinking. Do not use damaged guidewires.

The provided dispenser is the best means of handling the guidewire.

Sufficient guidewire length must remain exposed to maintain a firm grip on the guidewire at all times.

Dispenser

Every guidewire is provided in a dispenser packaged within a Tyvek pouch. Remove the guidewire assembly from the Tyvek pouch. Remove the guidewire protective cap immediately prior to guidewire use. Prepare the guidewire prior to insertion. It is recommended that the dispenser be filled with heparinized solutions (e.g. saline or dextrose) to bathe the guidewire during insertion.

The preformed "J" guidewire will resume its shape when removed from the product dispenser.

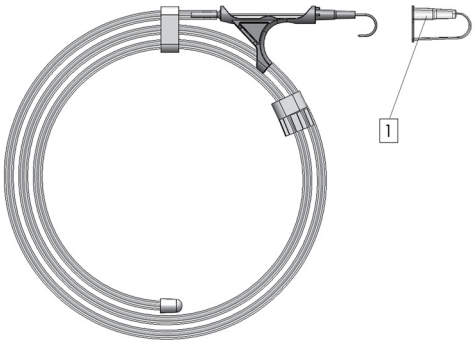

1. Guidewire protective cap

Inspection

Inspect the guidewire prior to use and discard if any deformities are present in the guidewire. Guidewire placement should be routinely monitored by x-ray or fluoroscopic procedure.

Technique

1. Puncture the vessel.
2. Insert the guidewire into the needle hub and gently advance 5-10 cm of the guidewire into the punctured vessel. Navigate the guidewire to the desired position.

   Caution. Avoid rough or overly vigorous manipulation of the guidewire to prevent damage to the guide or the vessel.
3. Remove the needle from the guidewire.
4. Dilate the tissue and vessel with the dilator using a slight rotary motion.
5. Remove the dilator (the vessel dilator is intended for vascular dilation only).
6. Introduce the catheter by sliding it over the guidewire.
7. Remove the guidewire.

Cool Line catheter

1. IN Luer
2. Out Luer
3. Infusion ports
4. Distal Luer
5. Proximal port

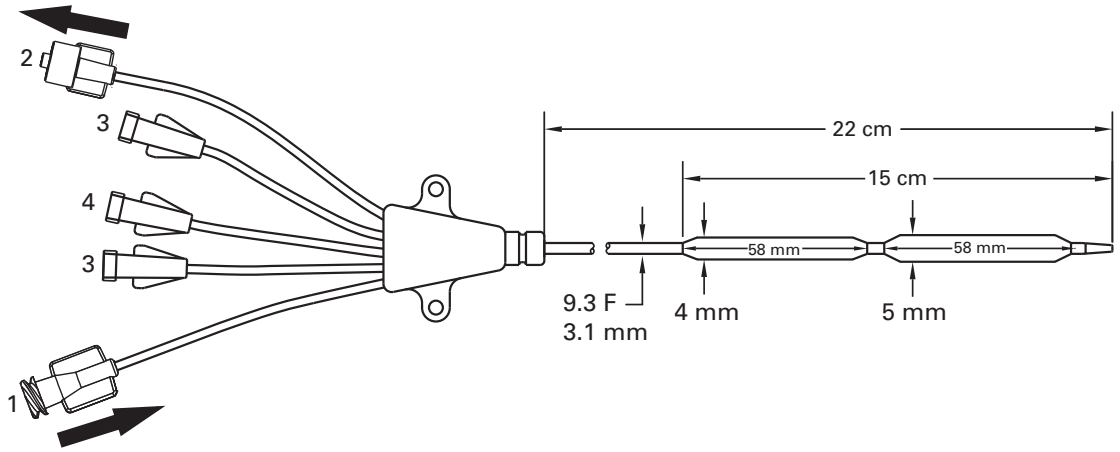

©2026 ZOLL Medical Corporation. All rights reserved. ZOLL and Cool Line are trademarks or registered trademarks of ZOLL Medical Corporation and/or ZOLL Circulation Inc. in the United States and/or other countries. All trademarks are the property of their respective owners.

Patent: www.zoll.com/patents

MEDLINE

VASCULAR ACCESS

REF MSC2304

SURESITE® WINDOW

TRANSPARENT FILM DRESSING

DIRECTIONS FOR USE:

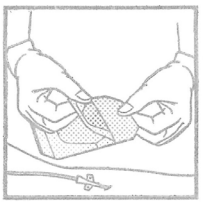

1 REMOVE first adhesive liner.

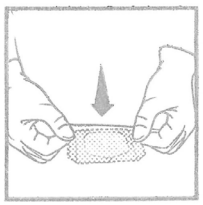

2 APPLY dressing.

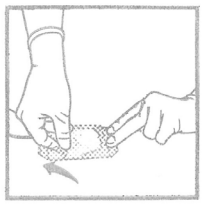

3 REMOVE second adhesive liner & SMOOTH edges.

INDICATIONS: As a primary dressing, to secure line sites. Can be left in place for up to 7 days.

GENERAL PRECAUTIONS & OBSERVATIONS: Can be used as a primary or secondary dressing. Should any signs of redness or irritation appear, discontinue use and consult a healthcare professional.

STORAGE: Protect from freezing - avoid excessive heat.

Sterile in unopened, undamaged package. Single use only.

4 x 4.5 DRESSING
4 x 4.5 IN
(10.2 x 11.4 CM)

1 STERILE DRESSING

PRODUCT IS NOT MADE WITH NATURAL RUBBER LATEX

LOT 63924121800

(01)10080196734870

www.medline.com

Suresite is a registered trademark of Medline Industries, LP. Manufactured in China for Medline Industries, LP. Three Lakes Drive, Northfield, IL 60093 USA, **1-800-MEDLINE** RG22ZHW